Sliding door system 8232 SFT

Two & Three -door desingn of closing and colliding direction
Fitting situation for profiles and system components

Planning dimensions

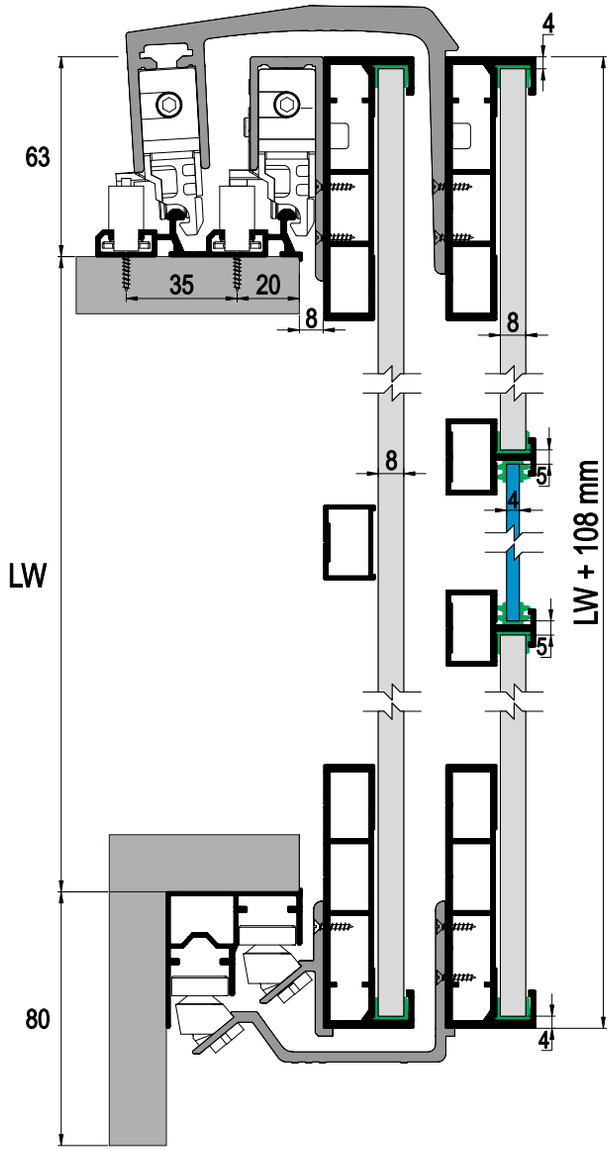

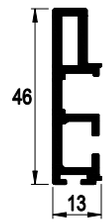

Handle Profile
M50 1501 410

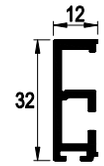

Handle Profile
M50 1500 410

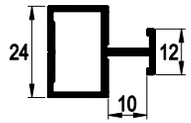

Middle Profile
M50 1504 410

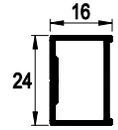

Support Profile
M50 1503 410

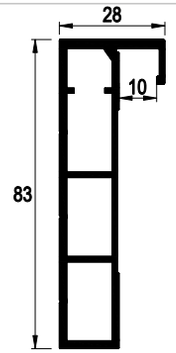

Upper / Bottom Frame
M50 1502 410

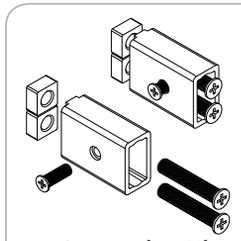

Connection Kit
M43 0001

4 mm Glass
M45 1016

8 mm Wooden
M45 1017

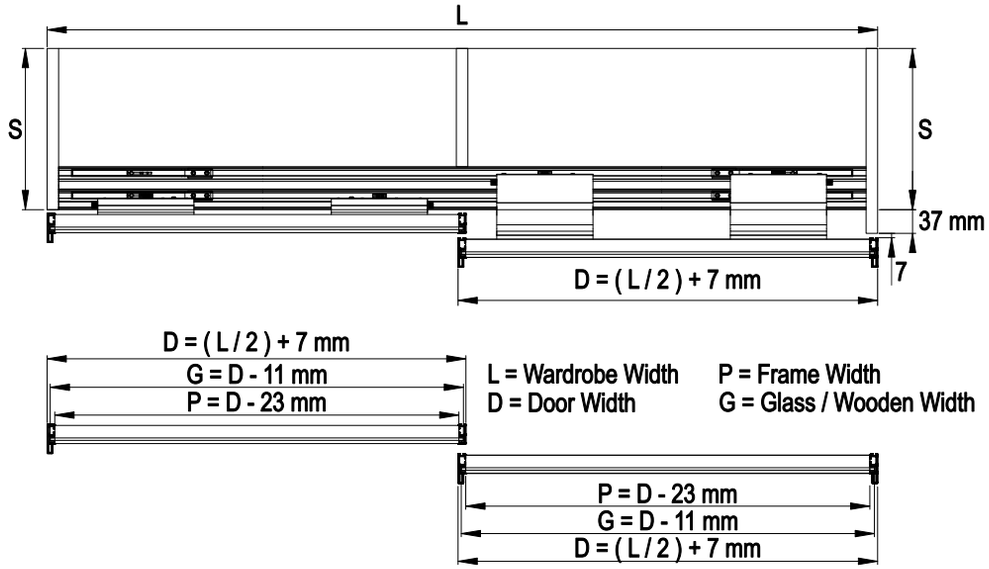

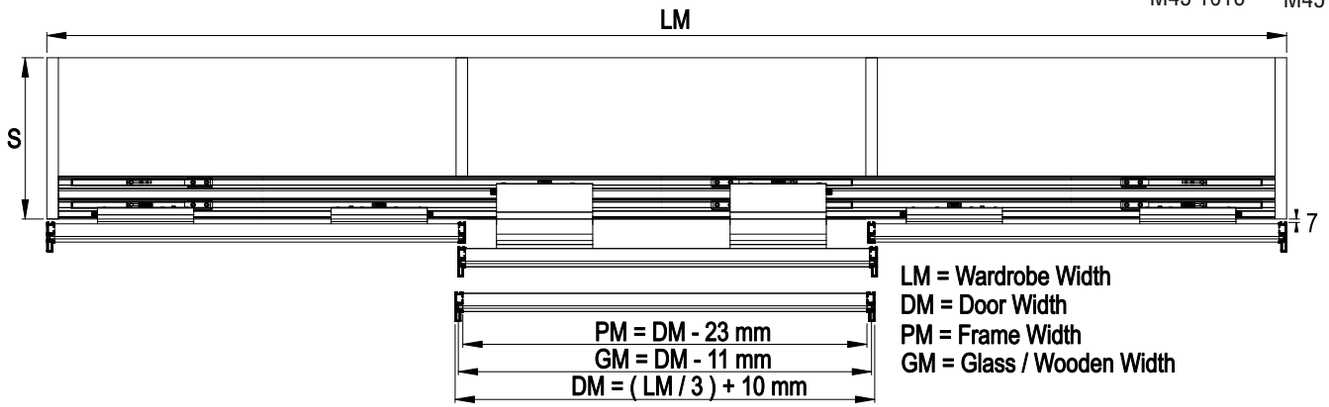

Recommended installation dimensions. All technical details arre subject to change by Albatur Co.