Multiline **0171**

30 KG SÜRME KAPAK SİSTEMİ • SLIDING DOOR SYSTEM

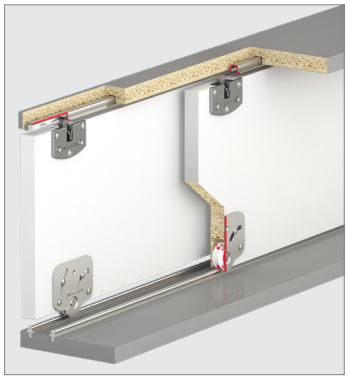

18 mm

30

Bilgi / Information

- 1 Kutu İçeriği : 2 Kapak Mekanizma
- In 1 box : 2 Door Mechanism

Yavaşlatıcı Alternatifi / Soft Closer Alternative

117-6942-1610 | 117-6666-1610 | 117-6710-1610

0171 1 Takım İçeriği / 1 Kit Includes

2X

103-0171-1300-500

2X

103-0171-1630-501

2X

103-0171-1610-502

2X

108-7700-1300-508

Ray Profilleri / Rail Profiles

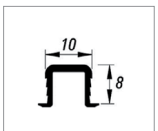

151-0173-1600 mt

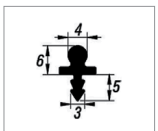

150-7171-1410 mt

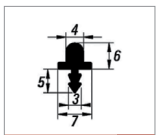

151-0174-1600 mt

Kulp Profilleri / Handle Profiles

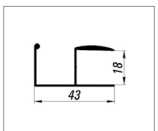

150-2523-1410 mt

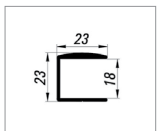

150-2524-1410 mt

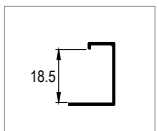

150-1420-1420 mt

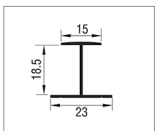

150-2930-1420 mt

Özel Üretim / Special Production

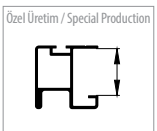

150-2800-1420 mt

Teknik Detay / Technical Detail

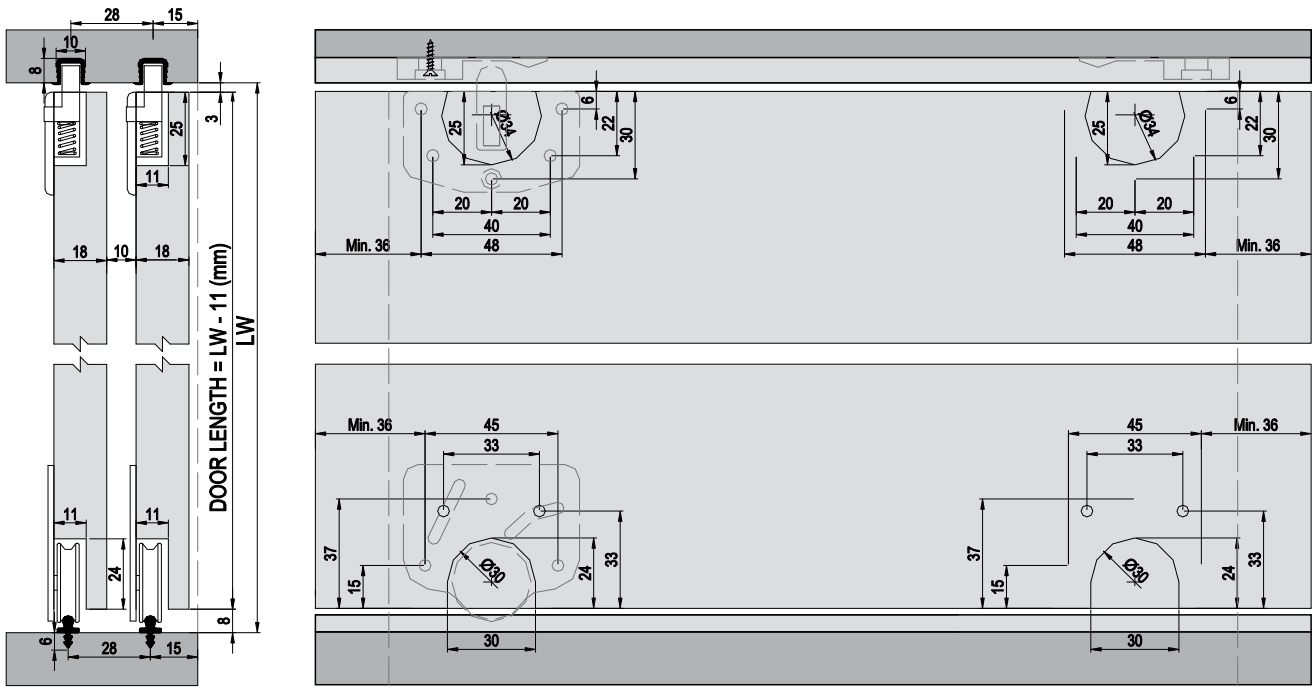

Ölçülerde değişiklik yapma hakkı saklıdır. Reserves the right to the change of the dimensions.

Kod / Code No	Açıklama / Description	Renk / Colour	Birim / Unit			Profil mt. / Profiles mt.			Bağ / Bnd.
103-0171-1300	30 Kg Sürme Kapak Sistemi / 30 Kg Sliding Door System	Galvaniz / Galvanized	1 Kapak / 1 Kit	100	3.200	-	-	-	-
151-0173-1600	PVC Ray Profili / PVC Rail Profile	Gri / Grey	mt.	-	-	-	-	3,0	50 ad/pcs
151-0174-1600	PVC Ray Profili / PVC Rail Profile	Gri / Grey	mt.	-	-	-	-	3,0	50 ad/pcs
150-7171-1410	Alüminyum Ray Profili / Aluminium Rail Profile	Eloksal / Mat Anodized	mt.	-	-	-	-	3,0	50 ad/pcs
150-2523-1410	Alüminyum Kulp Profili / Aluminium Handle Profile	Eloksal / Mat Anodized	mt.	-	-	-	2,5	3,0	10 ad/pcs
150-2524-1410	Alüminyum Kapama Profili / Aluminium Closure Profile	Eloksal / Mat Anodized	mt.	-	-	-	2,5	3,0	10 ad/pcs
150-1420-1420	Alüminyum Kapama Profili / Aluminium Closure Profile	Parlak / Bright	mt.	-	-	-	-	3,0	10 ad/pcs
150-2930-1420	Alüminyum Orta Kayıt / Aluminium Horizontal Central	Parlak / Bright	mt.	-	-	-	-	3,0	10 ad/pcs